ELASTOTECNICA
ELECTRICAL CONNECTORS

COMPRESSION CONNECTOR FOR "T" BODY

HECHO EN MÉXICO

ELASTOTECNICA brand compression terminals are machined with the highest quality aluminum extrusion, same that guarantees a uniform conductivity. ELASTOTECNICA brand cable accessories offer compatibility with any other brand of connectors, in addition they can be purchased at a very low cost. Determine the gauge of the wire you will use in the circuit installation and based on the table, select the aluminum compression connector code.

COMPRESSION CONNECTOR CODE 037700XXX	COMPRESSION CONNECTOR CALIBER (ALUMINUM OR COPPER)		A (mm)	B (mm / inch)	C (mm)
	CONCENTRICAL ROUND OF FILAMENTS (Stranded / Compressed)	COMPACT (compt) / solido (sol)			
240	1/0 - 2/0 AWG		21.59	9.92 (25/64")	88.90
260	3/0 - 4/0 AWG		21.59	12.3 (31/64")	88.90
280	250 - 300 Kcmil		29.26	15.08 (19/32")	92.08
300	350 - 400 Kcmil		29.26	16.67 (21/32")	95.25
330	500 - 600 Kcmil		33.53	20.64 (13/14")	95.25
380	700 - 900 Kcmil		41.15	26.98 (1 1/16")	95.25
400	900 - 1000 Kcmil		41.45	28.58 (1 1/8")	95.25

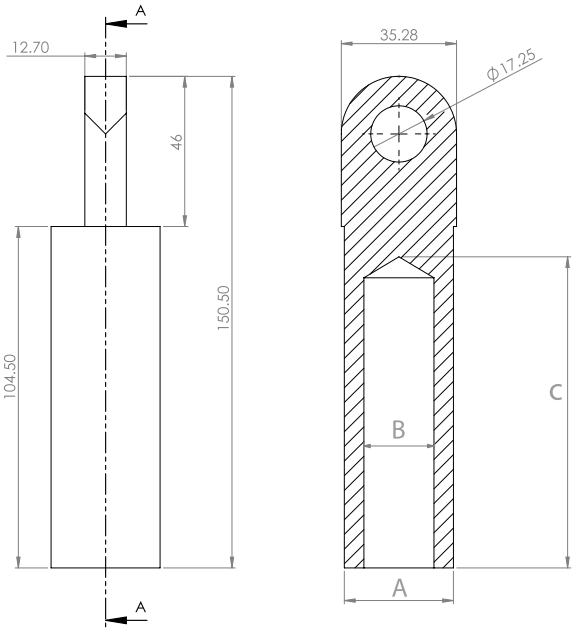

visit our online store

Carretera Ánimas - Coyotepec Km 4 S/N , Colonia Ixtapacalco, Coyotepec, Estado de México C.P. 54666
WWW.ELASTOTECNICA.COM.MX
(0052) 5541697000 ventas@elastotecnica.com.mx